Dart Aerospace Ltd.
1270 Aberdeen St
Hawkesbury, ON
K6A 1K7
Canada

Tel (613) 632-5200
Fax 613 632-5246

RBE703A95-0505-00-1
Job Sheet 189281

Part No: RBE703A95-0505-00-1 **Job Qty:** ~~10~~ pcs 22 [redacted] D.a
Part Name: Quill

Part Weight: 0 lbs **Status:** New **Priority:** Medium
Job Created: 1/22/19 **Job Tracking No:**
Due Date: ~~2/8/19~~ April 1 **Created By:** Marie Lajeunesse
Type: ~~Stock~~ SOLD **Description:**
Note: DWG RBE703A95-0505-00 Rev 9 IPP Rev A 18.01.15 New issue DP verify DD
Ship Via:

Bill of Materials

Job Routing

Op No	Operation	Qty	Start Date	Due Date	Standard Setup Hrs	Standard Run Hrs	Workcenter/Supplier	Lead Time	Sign-off
110	**SL-154 - 1**	10 pcs		2/8/19	0.00	10.00	SL-154 - 1		JB 19.03.01
120	**QC 2**	10 pcs		2/8/19	0.00	0.00	QC 2 - 1		
							QC 2 - 12		
							QC 2 - 14		
							QC 2 - 17		
							QC 2 - 19		
							QC 2 - 2		
							QC 2 - 20		
							QC 2 - 22		
							QC 2 - 23		
							QC 2 - 25		
							QC 2 - 32		
							QC 2 - 33		
							QC 2 - 35		
							QC 2 - 38		
							QC 2 - 39		
							QC 2 - 4		
							QC 2 - 40		
							QC 2 - 44		
							QC 2 - 45		
							QC 2 - 48		
							QC 2 - 49		
							QC 2 - 50		
							QC 2 - 51		
							QC 2 - 52		
							QC 2 - 54		
							QC 2 - 56		
							QC 2 - 57		
							QC 2 - 62		JB 19.03.01
							QC 2 - 63		

DAS 62 9-89

DAS 62 9-89

Dart Aerospace Ltd.
1270 Aberdeen Street
Hawkesbury, ON K6A 1K7
CANADA
TEL.: 1 613 632 – 5200
Email: sales@dartaero.com
www.dartaerospace.com

DART AEROSPACE

Container No: S158368
Part: RBE703A95 – 0505 – 00 – 1
Job No: 189281
Serial No/Batch: S158368
Revision: L
Inspector:
Exp Date:
Instructions:
Date: 03/01/19

Plex 1/22/19 11:04 AM Dart.lajeunesse.marie

					QC 2 - 8	
122 **Conventional Mill - 1 - B4B**	10 pcs	2/8/19	0.00	5.00	Conventional Mill - 1 - B4B	
					Conventional Mill - 2 - B4B	
124 **QC 2**	10 pcs	2/8/19	0.00	0.00	QC 2 - 1	
					QC 2 - 12	
					QC 2 - 14	
					QC 2 - 17	
					QC 2 - 19	
					QC 2 - 2	
					QC 2 - 20	
					QC 2 - 22	
					QC 2 - 23	
					QC 2 - 25	
					QC 2 - 32	
					QC 2 - 33	
					QC 2 - 35	
					QC 2 - 38	
					QC 2 - 39	
					QC 2 - 4	
					QC 2 - 40	
					QC 2 - 44	
					QC 2 - 45	
					QC 2 - 48	
					QC 2 - 49	
					QC 2 - 50	
					QC 2 - 51	
					QC 2 - 52	
					QC 2 - 54	
					QC 2 - 56	
					QC 2 - 57	
					QC 2 - 62	
					QC 2 - 63	
					QC 2 - 8	
130 **QC 8**	10 pcs	2/8/19	0.00	0.00	QC 8 - 12	
					QC 8 - 14	
					QC 8 - 17	
					QC 8 - 20	
					QC 8 - 25	
					QC 8 - 3	
					QC 8 - 32	
					QC 8 - 33	
					QC 8 - 35	
					QC 8 - 38	
					QC 8 - 39	
					QC 8 - 4	
					QC 8 - 44	
					QC 8 - 45	
					QC 8 - 49	
					QC 8 - 58	
					QC 8 - 8	D.A 19-03-21
					QC 8 - 9	
					QC 8 - 68	
					QC 8 - 67	
					QC 8 - 1 (A)	
150 **Outsource - 4 - Anodize**	10 pcs	2/8/19			GRO002-VC 8	03/22/2019.
160 **Packaging 2-1 - Receive - B4B**	10 pcs	2/8/19	0.00	0.00	Packaging 2 - 1 - B4B	
					Packaging 2 - 2 - B4B	

Not required D.A

Not required

22 pcs

Plex 1/22/19 11:04 AM Dart.lajeunesse.marie

					Packaging 2 - 3 - B4B	
					Packaging 2 - 5 - B4B	
					Packaging 2 - 4 - B4B	
					Packaging 2 - 6 - B4B	
					Packaging 2 - 7 - B4B	
					Packaging 2 - 8 - B4B	
					Packaging 2 - 9 - B4B	
					Packaging 2 - 10 - B4B	
					Packaging 2 - 11 - B4B	
					Packaging 2 - 12 - B4B	
					Packaging 2 - 13 - B4B	DP MAR 2 9 2019
					Packaging 2 - 14 - B4B	
					Packaging 2 - 15 - B4B	
					Packaging 2 - 16 - B4B	
					Packaging 2 - 17 - B4B	
					Packaging 2 - 18 - B4B	
					Packaging 2 - 19 - B4B	
					Packaging 2 - 20 - B4B	
					Packaging 2 - 21 - B4B	
					Packaging 2 - 22 - B4B	
					Packaging 2 - 23 - B4B	
					Packaging 2 - 24 - B4B	
					Packaging 2 - 25 - B4B	
					Packaging 2 - 26 - B4B	
					Packaging 2 - 27 - B4B	
					Packaging 2 - 28 - B4B	
					Packaging 2 - 29 - B4B	
					Packaging 2 - 30 - B4B	
					Packaging 2 - 31 - B4B	
					Packaging 2 - 32 - B4B	
					Packaging 2 - 33 - B4B	
					Packaging 2 - 34 - B4B	
					Packaging 2 - 35 - B4B	
					Packaging 2 - 36 - B4B	
170 **QC 6**	10 pcs	2/8/19	0.00	0.00	QC 6 - 38	
					QC 6 - 42	DAS
					QC 6 - 9	APR 0 1 2019 40
					QC 6 - 68	9-89
					QC 6 - 61	
180 **Packaging 3-1 - Stock - B4B**	10 pcs	2/8/19	0.00	0.00	Packaging 3 - 1 - B4B	
					Packaging 3 - 2 - B4B	
					Packaging 3 - 3 - B4B	
					Packaging 3 - 4 - B4B	
					Packaging 3 - 5 - B4B	
					Packaging 3 - 6 - B4B	
					Packaging 3 - 7 - B4B	
					Packaging 3 - 8 - B4B	
					Packaging 3 - 9 - B4B	
					Packaging 3 - 10 - B4B	
					Packaging 3 - 11 - B4B	
					Packaging 3 - 12 - B4B	
					Packaging 3 - 13 - B4B	
					Packaging 3 - 14 - B4B	
					Packaging 3 - 15 - B4B	
					Packaging 3 - 16 - B4B	
					Packaging 3 - 17 - B4B	
					Packaging 3 - 18 - B4B	
					Packaging 3 - 19 - B4B	
					Packaging 3 - 20 - B4B	

					Packaging 3 - 21 - B4B	
					Packaging 3 - 22 - B4B	
					Packaging 3 - 23 - B4B	
					Packaging 3 - 24 - B4B	
					Packaging 3 - 25 - B4B	
					Packaging 3 - 26 - B4B	
					Packaging 3 - 27 - B4B	
					Packaging 3 - 28 - B4B	
					Packaging 3 - 29 - B4B	
					Packaging 3 - 30 - B4B	
					Packaging 3 - 31 - B4B	
					Packaging 3 - 32 - B4B	
					Packaging 3 - 33 - B4B	
					Packaging 3 - 34 - B4B	
					Packaging 3 - 35 - B4B	
					Packaging 3 - 36 - B4B	
190 **QC 21 - SA**	10 pcs	2/8/19	0.00	0.00	QC 21 - SA - 21	DAS 21
					QC 21 - SA - 70	APR 0 1 2019 GA-133

Part Op **110** - SL-154 (MORI SL-154 LATHE), 1-Machine as per DWG. FB789 FOLIO REV: AA DWG REV:
Descriptions: 9 2-Deburr 3-Engrave T/N And / or S/N number as required Using Marktronic engraver as per DWG.
120 - (QC2- Inspect parts off machine FAI/FAIB)
122 - (Manufacture as per dwg), 1-Machine flats as per DWG. 2-Deburr
124 - (QC2- Inspect parts off machine FAI/FAIB)
130 - (QC8- Inspect parts - second check)
150 - -Issue P/O: PO _____ -ANODIZE COLOR RED, PER IAW MIL-A-8625 TYPE-2 CLASS-2, Water sealant As Per Dwg RBE703A95-0505-00-1 Rev. 9 -Certificate of Conformity is required
160 - (Receive & Inspect for Damage & Mat'l Certs)
170 - (QC6- All purchased or subcontracted products)
180 - (Identify as per dwg & Stock Location:_____)
190 - (QC21- Final Inspection - Work Order Release)

Job BOM

Part / Item	Component Name	Quantity	Operation	Container
M6061T6R1.125	6061 Round Bar 1.125	2.7000 ft (.27 ea)	110-SL-154 - 1	S123405

Job Allocations

Operation	Component Part	Required	Inventory	Allocated
110-SL-154 - 1	M6061T6R1.125	3	22	0

Part Specifications

Specifications could not be found.

Plex 1/22/19 11:04 AM Dart.lajeunesse.marie

This drawing, specifications, and concepts contained here in are the sole property of Dart Aerospace, and may not be reproduced or used in any fashion without the prior written permission of Dart Aerospace Eugene, OR.

REVISIONS					
REV	ECR	DESCRIPTION	DATE	INITIAL	APPROVED
1		CHANGED O-RING SIZE FROM Ø14.4mm OD x 2.4mm CROSS SECTION. ALSO ADDED NOTES. CH'D SLOTS FROM 90°Ø.131 AND ID FROM .230	5/28/2009	WP	RW
1A		DELETED 49° REF. DIM. FOR -1 PER G.E.	12/16/2010	RJC	RW
2		CH'D ENGAGEMENT SLOT ANGLE FROM 60° TO 90° PER G.E.	3/7/2011	RJC	
3		CH'D STEM LENGTH FROM .800 TO 1.35, DELETED BARB, ADDED GROOVE.	7/30/2012	JAG	
4		CH'D 8X R.155 & 8X .121 TO 6X R.375 & 6X .106	4/17/2013	CFS	GE
5		-1 CH'D DIM WAS Ø.125↧.079 IS Ø.125 +.005/-.000↧.079. CH'D DIM WAS 6X .106 IS 6X .11. CH'D DIM WAS 6X R .375 IS 6X R .38.	6/19/2013	BIM	RW
7B		-1 CH'D DIMS WAS 2X .039 X 45° IS 2X .40 X 45°, WAS .020 IS .02, WAS 2X 30° IS 30°, WAS 6X .11 IS 6X R.38 EQUALLY SPACED ON Ø1.60 B.C., WAS Ø.250 IS Ø.25 THRU ↧2.97 MAX. ADDED NOTES WAS ENGRAVE T/N IS ENGRAVE T/N, S/N, "MADE IN USA", WAS .500 IS .500 NO ENGRAVING. DELETED DIMS .095, .244.	2/5/2014	DPD	RJC
9	16-0257	-1 CH'D DIM WAS Ø.25 THRU ↧2.97 MAX IS Ø.25 ↧2.97 MAX.	12/5/2016	SM	JAG

SEE ATTACHED DEVIATION

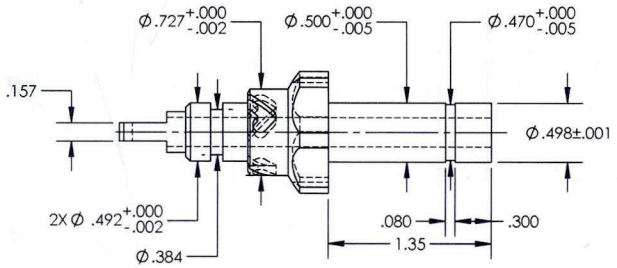

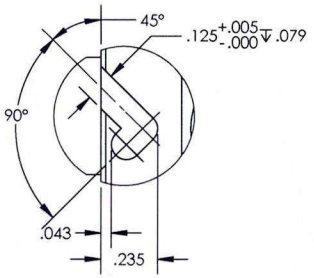

DETAIL A
SCALE 2 : 1
3X EQUALLY SPACED

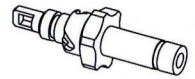

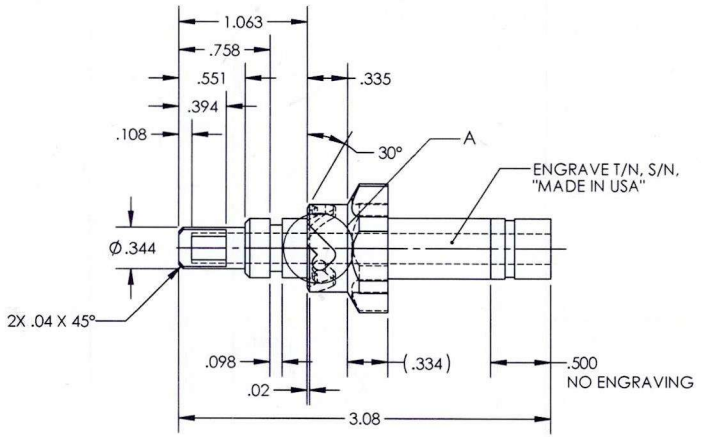

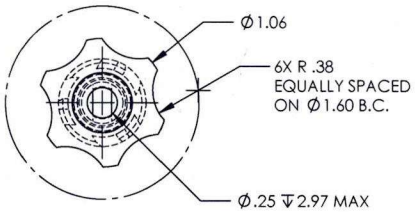

SHOP COPY
RETURN TO
ENGINEERING
UNCONTROLLED COPY
SUBJECT TO AMENDMENT
WITHOUT NOTICE
WORK ORDER
NO. 189281 HCS
19-01-22

-1
QUILL

DART AEROSPACE

TITLE	TGB DRAIN TUBE
DWG NO.	RBE703A95-0505-00-1 REV 9
MAT'L	6061
HEAT TREAT	
FINISH	RED ANODIZE
SPEC	MIL-A-8625F, TYPE II, CLASS II
DRAWN BY:	PERRITT
CHECKED:	CLOUGH
OPPS APPR:	ANDERSON
QA APPR:	LINDSAY
APPROVED:	GILBERT
SCALE	1:1
DATE	7/30/2012

UNLESS OTHERWISE SPECIFIED DIMENSIONS ARE IN INCHES
.XXX ± .005 FRACTIONS ± 1/8
.XX ± .01 ANGLES ±.5°
.X ± .1 SURFACES = 125
1. BREAK ALL SHARP EDGES .015 x 45° OR .015R
2. DIMENSIONAL LIMITS APPLY AFTER PLATING
3. INTERPRET DIM AND TOL PER ASME Y14.5M-2009

USED ON MODEL
EUROCOPTER AS-350

SHEET 2 OF 2

DART AEROSPACE LTD	Work Order:	189281
Description: Quill	Part Number:	RBE703A95-0505-00-1
Inspection Dwg: RBE703A95-0505-00-1 Rev: 9		Page 1 of 1

INSPECTION SHEET

Drawing Dimension	Tolerance	Actual Dimension	Accept	Reject	Method of Inspection	Comments
.157	±.005	.158	✓		Vernier	JB-05
.492	+0 -.002	.491	✓		Mic	ML-07
.384	±.005	.384	✓		Vernier	JB-05
1.35	±.01	1.351	✓		Vernier	JB-05
.080	±.005	.079	✓		Vernier	JB-05
.300	±.005	.300	✓		Vernier	JB-05
.498	±.001	.498	✓		Mic	ML-07
.470	±.005	.468	✓		Vernier	JB-05
.500	+0 -.005	.498	✓		mic	ML-07
.727	+0 -.002	.7253	✓		mic	ML-07
1.063	±.005	1.064	✓		Vernier	JB-05
.758	±.005	.758	✓		Optical	comp.
.551	±.005	.551	✓		optical	comp.
.394	±.005	.3933	✓		optical	comp.
.108	±.005	.108	✓		Vernier	JB-05
.344	±.005	.3446	✓		mic	ML-07
.04X45°	±.01 ±.5°	.042 x45°	✓		Vernier	JB-05
.098	±.005	.0985	✓		Vernier	JB-05
3.08	±.01	3.0795	✓		Vernier	JB-05
.334	±.005	.336	✓		Vernier	JB-05
.335	±.005	.3355	✓		Vernier	JB-05
.043	±.005	.045	✓		Vernier	JB-05
.235	±.005	.233	✓		Vernier	JB-05
.125	+.005 -0	.1255	✓		Vernier	JB-05
↧.079	±.005	.0805	✓		Vernier	JB-05
1.06	±.01	1.0625	✓		Mic	VHJ-02
Ø.25	±.01	.251	✓		Vernier	JB-05
↧2.97	+0 -.01	2.971	✓		Vernier	JB-05

DAS 62 9-89

Measured by:	JB	Checked by:	JB	QC Inspector:	
Date:	19.03.01	Date:	19-03-21	Date:	

Engineering Approval: (If necessary)		Date:	

Rev	Date	Change	Revised by	Approved
A	14.07.31	New Issue	KJ	

Dart Aerospace Ltd.
1270 Aberdeen St
Hawkesbury, ON
K6A 1K7
Canada

Tel (613) 632-5200

PURCHASE ORDER
PO042956

Supplier:	GRO002-VC Group Altech 2455 Halpern St Laurent QC H4S 1N9 Canada Phone: 514-335-3666 Fax: 514-335-3868	**PO No:**	PO042956
		PO Date:	3/22/19
		Due Date:	3/29/19
		Purchase Order Revision:	
		Revision Date:	
		Ship-To Contact:	Phone:
Attention:	Grenon, Sylvie	**Via:**	Ground
		Pymt Terms:	Net 60
Ship To:	1270 Aberdeen Street Hawkesbury ON K6A 1K7 Canada Phone: 613-632-5200	**Freight Terms:**	
		Special Comments:	

Items

Line Item	Job	Part	Description	Status	Account	Due Date	Order Quantity	Received Quantity	Balance	Unit Price (CAD)	Extended Price
1	189182	RBE000-117-9	Plate -Issue P/O; _____ -ANODIZE COLOR CLEAR, PER IAW MIL-A-8625F TYPE 2 CLASS 1, Water sealant -Material type; 6061T6 -Certificate of Conformity is required	Firmed	-	3/29/19	4 pcs	0 pcs	4 pcs	$4.45/pcs	$17.80
Line Item Note	****** RUSH ********* RUSH ** NEED BACK MARCH 28,2019 **										
2	188112	RBE1X54-176-875	Press Tool -Issue P/O; _____ -ANODIZE COLOR CLEAR, PER IAW MIL-A-8625F TYPE 2 CLASS 1, Water sealant -Material type; 6061T6 -Certificate of Conformity is required	Firmed	-	3/29/19	4 pcs	0 pcs	4 pcs	$4.45/pcs	$17.80

MAR 2 9 2019

MAR 2 9 2019

Plex 3/25/19 4:09 PM dart.Lussier.Patrick

DART AEROSPACE

Dart Aerospace Ltd.
1270 Aberdeen St
Hawkesbury, ON
K6A 1K7
Canada

Tel (613) 632-5200

PURCHASE ORDER
PO042956

Items

Line Item	Job	Part	Description	Status	Account	Due Date	Order Quantity	Received Quantity	Balance	Unit Price (CAD)	Extended Price
3	188718	RBWA353A04-01	Cap -Issue P/O to ATG: _____ - ANODIZE COLOR CLEAR, PER IAW MIL-A-8625F TYPE 2 CLASS 1 WATER SEAL - Certificate of Conformity is required	Firmed	-	3/29/19	5 pcs	0 pcs	5 pcs	$4.45/pcs	$22.25
Line Item Note	** need back March 29,2019 **										
	190651			Firmed	-	3/29/19	4 pcs	0 pcs	4 pcs	$4.45/pcs	$17.80
					Sub Total:		**9**	**0**	**9**		**$40.05**
4	188156	RBEVR-L11-0010-004-B-1	Press -Issue P/O; _____ -ANODIZE COLOR CLEAR, PER IAW MIL-A-8625F TYPE 2 CLASS 1, Water sealant -Material type; 6061T6 -Certificate of Conformity is required	Firmed	-	3/29/19	4 pcs	0 pcs	4 pcs	$4.45/pcs	$17.80
Line Item Note	** need back March 29,2019 **										
5	189487	RBE1X25-166-857-1	Tube -Issue P/O; _____ -ANODIZE COLOR CLEAR, PER IAW MIL-A-8625F TYPE 2 CLASS 1, Water sealant -Material type; 6061T6 -Certificate of Conformity is required	Firmed	-	3/29/19	6 pcs	0 pcs	6 pcs	$4.45/pcs	$26.70
Line Item Note	** need back March 29,2019 **										

Dart Aerospace Ltd.
1270 Aberdeen St
Hawkesbury, ON
K6A 1K7
Canada

Tel (613) 632-5200

PURCHASE ORDER
PO042956

Items

Line Item	Job	Part	Description	Status	Account	Due Date	Order Quantity	Received Quantity	Balance	Unit Price (CAD)	Extended Price
6	190652	RBWA353A04-06	Cap (Outsource process-Anodize per QSI017 4.1.10.1) -Issue P/O to ATG: _____ -ANODIZE COLOR BLACK, PER IAW MIL-A-8625F TYPE 2 CLASS 2, Water sealant -Certificate of Conformity is required	Firmed	-	3/29/19	9 pcs	0 pcs	9 pcs	$1.68/pcs	$15.12
Line Item Note	** need back March 29,2019 ** BLACK										
7	191261	HT-900-NC-09B	Filter Housing Outsource4 (Outsource process-Anodize per QSI017 4.1.10.1) -Issue P/O to ATG: _____ -ANODIZE COLOR BLACK, PER IAW MIL-A-8625F TYPE 2 CLASS 2, Water sealant -Certificate of Conformity is required	Firmed	-	3/29/19	4 pcs	0 pcs	4 pcs	$1.68/pcs	$6.72
Line Item Note	** need back March 29,2019 ** BLACK										
8	190735	647.4212	Plate Issue P/O to ATG : _____ 1- Black Anodize as per Dwg 647.4200	Firmed	-	3/29/19	10 pcs	0 pcs	10 pcs	$1.68/pcs	$16.80
Line Item Note	** need back March 29,2019 ** BLACK										

MAR 2 9 2019 DP

Dart Aerospace Ltd.
1270 Aberdeen St
Hawkesbury, ON
K6A 1K7
Canada

Tel (613) 632-5200

PURCHASE ORDER
PO042956

Items

Line Item	Job	Part	Description	Status	Account	Due Date	Order Quantity	Received Quantity	Balance	Unit Price (CAD)	Extended Price
9	191740	RBE350A93-3302-02-1	Handle (Outsource process-Anodize per QSI017 4.1.10.1) -Issue P/O to ATG: _____ -ANODIZE COLOR BLACK, PER IAW MIL-A-8625F TYPE 2 CLASS 2, Water sealant As Per Dwg RBE350A93-3302-02-1 Rev. 11 -Certificate of Conformity is required	Firmed	-	3/29/19	10 pcs	0 pcs	10 pcs	$1.68/pcs	$16.80
Line Item Note	** need back March 29,2019 ** BLACK										
10	192223	SWA6A-700B	Wire Clamp, 1/2 X 1-3/8 X 1-1/4 -Issue P/O;_____ -ANODIZE COLOR BLACK, PER IAW MIL-A-8625F TYPE 2 CLASS 2, Water sealant -Material type; 6061T6 -Certificate of Conformity is required	Firmed	-	3/29/19	39 pcs	0 pcs	39 pcs	$1.59/pcs	$62.01
Line Item Note	** need back March 29,2019 ** BLACK										
11	189281	RBE703A95-0505-00-1	Quill -Issue P/O: PO _____ -ANODIZE COLOR RED, PER IAW MIL-A-8625 TYPE-2 CLASS-2, Water sealant As Per Dwg RBE703A95-0505-00-1 Rev. 9 -Certificate of Conformity is required	Firmed	-	3/29/19	22 pcs	0 pcs	22 pcs	$1.59/pcs	$34.98
Line Item Note	** need back March 29,2019 ** RED										

MAR 2 9 2019 DP

MAR ~~2 8~~ 2019 DP

MAR 2 9 2019

MAR 2 9 2019 DP

DAS 40 9-89

Dart Aerospace Ltd.
1270 Aberdeen St
Hawkesbury, ON
K6A 1K7
Canada

Tel (613) 632-5200

PURCHASE ORDER
PO042956

Items

Line Item	Job	Part	Description	Status	Account	Due Date	Order Quantity	Received Quantity	Balance	Unit Price (CAD)	Extended Price
12	191749	RBE350A94-3700-C-05	Bottom -Issue P/O: PO _____ -ANODIZE COLOR RED, PER IAW MIL-A-8625 TYPE-2 CLASS-2, Water sealant As Per Dwg RBE350A94-3700-C-05 Rev. 6 -Certificate of Conformity is required	Firmed	-	3/29/19	34 pcs	0 pcs	34 pcs	$1.59/pcs	$54.06
Line Item Note	** need back March 29,2019 ** RED										
	189348			Firmed	-	3/29/19	10 pcs	0 pcs	10 pcs	$1.59/pcs	$15.90
					Sub Total:		**44**	**0**	**44**		**$69.96**
13	190770	RBT18601	Main Rotor Swashplate ReGreasing Tool -Issue P/O to GROUPE ALTECH; PO_____ -ANODIZE COLOR RED, PER IAW MIL-A-8625 TYPE-2 CLASS-2, Water sealant -Material type; -Certificate of Conformity is required	Firmed	-	3/29/19	5 pcs	0 pcs	5 pcs	$1.59/pcs	$7.95
Line Item Note	** need back March 29,2019 ** RED										
14	191121	RBE332A94-3400-03-10	Block -Issue P/O; _____ -ANODIZE COLOR RED, PER IAW MIL-A-8625 TYPE-2 CLASS-2, Water sealant -Material type; 6061T6 -Certificate of Conformity is required	Firmed	-	3/29/19	5 pcs	0 pcs	5 pcs	$1.59/pcs	$7.95

Plex 3/25/19 4:09 PM dart.Lussier.Patrick

Dart Aerospace Ltd.
1270 Aberdeen St
Hawkesbury, ON
K6A 1K7
Canada

Tel (613) 632-5200

PURCHASE ORDER
PO042956

Items

Line Item	Job	Part	Description	Status	Account	Due Date	Order Quantity	Received Quantity	Balance	Unit Price (CAD)	Extended Price
Line Item Note	** need back March 29,2019 ** RED										

Grand Total: **$358.44**

Order Notes

Procurement Quality Clauses
A005 right of entry
A012 chemical and physical test report
A016 personnel qualification
A017 raw material identification (as applicable)

A022 Apical Processing
A024 process certifications
A026 certification of material conformance

A041 quality management system
A042 dart notification by supplier
A043 retension of quality documents

A048 counterfeit parts avoidance, detection, mitigation and disposition program

A049 supplier awareness

Terms & Condition of Purchasing(Suppliers) and Procurement Quality Clauses are an integral part of our AS9100 requirements. To learn in detail, please visit www.dartaerospace.com for further explanation.

Plex 3/25/19 4:09 PM dart.Lussier.Patrick

GROUPE altech
2193

2455, Rue Halpern | Saint-Laurent | Québec | H4S 1N9
Tel: 514-335-3666 Fax: 514-335-3868
www.groupaltech.com

Certificat de Conformité / Certificate of Compliance

0 1 7 9 3 6 - 1

Bon de Livraison / Packing Slip

017936 - 1

Livré à / Ship to

DART AEROSPACE LTD
1270 ABERDEEN STREET
HAWKESBURY, ON, K6A1K7
CANADA
Tel.: 613-632-5200 Fax.:

Client / Customer:

DART AEROSPACE LTD
1270 ABERDEEN STREET
HAWKESBURY, ON, K6A1K7
CANADA
BUYER:

Date expédition / Ship date	Créé Par / Generated By	Transport / No de Compte / Courrier / Acc. No.	Bon de commande Client / Customer Purchase Order No.
28-Mar-2019	Shankar Anand		042956

#Ligne / Line#	No. de Série / # Pièce / Part Number / Line Item Details / Job # / Ref #	Description pièce(s)	CATG. U/M	Quantités / Quantities Comm. /Ordered	Exp/ Shipped	Qté NC/ NC Qty	Qté Scrap/	À venir/ Back Order
1	RBE000-117-9 Rev.	RBE000-117-9 01 -ANO-CLEAR [ANODIZE CLEAR] MIL-A-8625F TYPE 2 CLASS 1	ANODIZE CH	4	4	0	0	0
2	RBE1X54-176-875 Rev.	RBE1X54-176-875 01 -ANO-CLEAR [ANODIZE CLEAR] MIL-A-8625F TYPE 2 CLASS 1	ANODIZE CH	4	4	0	0	0
3	RBWA353A04-01 Rev.	RBWA353A04-01 01 -ANO-CLEAR [ANODIZE CLEAR] MIL-8625F TYPE 2 CLASS 1	ANODIZE CH	9	9	0	0	0
4	RBEVR-L11-0010-004-B-1 Rev.	RBEVR-L11-0010-004-B-1 01 -ANO-CLEAR [ANODIZE CLEAR] MIL-A-8625F TYPE 2 CLASS 1	ANODIZE CH	4	4	0	0	0
5	RBE1X25-166-857-1 Rev.	RBE1X25-166-857-1 01 -ANO-CLEAR [ANODIZE CLEAR] MIL-A-8625F TYPE 2 CLASS 1	ANODIZE CH	6	6	0	0	0
6	RBWA353A04-06 Rev.	RBWA353A04-06 01 -ANO-BLACK [ANODIZE BLACK] MIL-A-8625F TYPE 2 CLASS 2	ANODIZE CH	9	9	0	0	0
7	HT-900-NC-09B Rev.	HT-900-NC-09B 01 -ANO-BLACK [ANODIZE BLACK] MIL-A-8625F TYPE 2 CLASS 2	ANODIZE CH	4	4	0	0	0
8	647.4212 Rev.	647.4212 01 -ANO-BLACK [ANODIZE BLACK] MIL-A-8625F TYPE 2 CLASS 2	ANODIZE CH	10	10	0	0	0
9	RBE350A93-3302-02-1 Rev.	RBE350A93-3302-02-1 ANODIZE BLACK PER MIL-A-8625F TYPE 2 CLASS 2 WATER SEALENT	ANODIZE CH	10	10	0	0	0
10	SWA6A-700B Rev.	SWA6A-700B 01 -ANO-BLACK [ANODIZE BLACK] MIL-A-8625F TYPE 2 CLASS 2	ANODIZE CH	39	39	0	0	0
11	RBE703A95-0505-00-1 Rev.	RBE703A95-0505-00-1 01 -ANO-RED [ANODIZE RED] PER IAW MIL-A-8625 TYPE 2 CLASS 2 WATER SEALANT	ANODIZE CH	22	22	0	0	DAS 40 9-89
12	RBE350A94-3700-C-05 Rev.	RBE350A94-3700-C-05 01 -ANO-RED [ANODIZE RED] PER IAW MIL-A-8625 TYPE 2 CLASS 2 WATER SEALANT	ANODIZE CH	44	44	0	0	0

Copyright InterDataSoft

User ID SHANKAR

GROUPE altech

Certificat de Conformité / Certificate of Compliance

017936 - 1

2455, Rue Halpern | Saint-Laurent | Québec | H4S 1N9
Tel: 514-335-3666 Fax: 514-335-3868
www.groupaltech.com

Bon de Livraison / Packing Slip

017936 - 1

Livré à / Ship to

DART AEROSPACE LTD
1270 ABERDEEN STREET
HAWKESBURY, ON, K6A1K7
CANADA
Tel.: 613-632-5200 Fax.:

Client / Customer:

DART AEROSPACE LTD
1270 ABERDEEN STREET
HAWKESBURY, ON, K6A1K7
CANADA
BUYER:

Date expédition / Ship date	Créé Par / Generated By	Transport / No de Compte / Courrier / Acc. No.	Bon de commande Client / Customer Purchase Order No.
28-Mar-2019	Shankar Anand		042956

#Ligne / Line#	No. de Série / # Pièce / Part Number / Line Item Details / Job # / Ref #	Description pièce(s)	CATG. U/M	Quantités / Quantities: Comm. /Ordered	Exp/ Shipped	Qté NC/ NC Qty	Qté Scrap/	À venir/ Back Order
13	**RBT18601** Rev.	RBT18601 01 -ANO-RED [ANODIZE RED] MIL-A-8625 TYPE 2 CLASS2	ANODIZE CH	5	5	0	0	0
14	**3400-03-10** Rev.	3400-03-10 01 -ANO-RED [ANODIZE RED] PER IAW MIL-A-8625 TYPE 2 CLASS 2 WATER SEALANT	ANODIZE CH	5	5	0	0	0

10 pcs but 5 kits of 2 pcs

Notes Additionneles / Additional Notes

Epaisseur réele / Actual Thickness _____

Inspecteur Qualité / Quality Inspector _____

Réçu par / Received By _____

Nous certifions que les pièces énumérées ci-dessus ont été traitées en conformité avec votre commande et vos spécifications et rencontrent les éxigeances.
Notre résponsabilité financière et légale ne sera pas supérieure au montant de la facture issue.

We hereby certify that the parts listed above have been process in accordance with your purchase order and specifications and are in conformance with your requirements.
Our financial and legal responsability will not be higher than the amount of invoice.

Copyright InterDataSoft

User ID SHANKAR